NGK Corporation
Functional Ceramics Engineering Department
Electric Devices Division
Digital Society Business Group
2-56 Suda-cho, Mizuho, Nagoya, 467-8530, Japan
Tel +81-52-872-8875
https://www.ngk.co.jp/
28 April 2026

Regulation EU Technical documentation

Our products meet the applicable standards of the Regulation EU 2023/1542.

Product name : model

EnerCera Coin(Lithium secondary battery) : ET2016C-R

Cell is for industrial use only. Cell is not intended for use by general consumers as a stand-alone product (charge/discharge, integration into equipment, removal from equipment, etc.).

If you intend to use Cell for any of the following purposes, please make sure to contact us beforehand.

- Purposes for which extremely high reliability is required, such as use in systems, machines or equipment that may involve danger to human lives or property, including nuclear control systems, transport equipment (railways, vehicles, aircraft, ships, etc.), medical equipment or safety equipment.
- Other equivalent purposes that require a high level of safety.

Exterior diagram

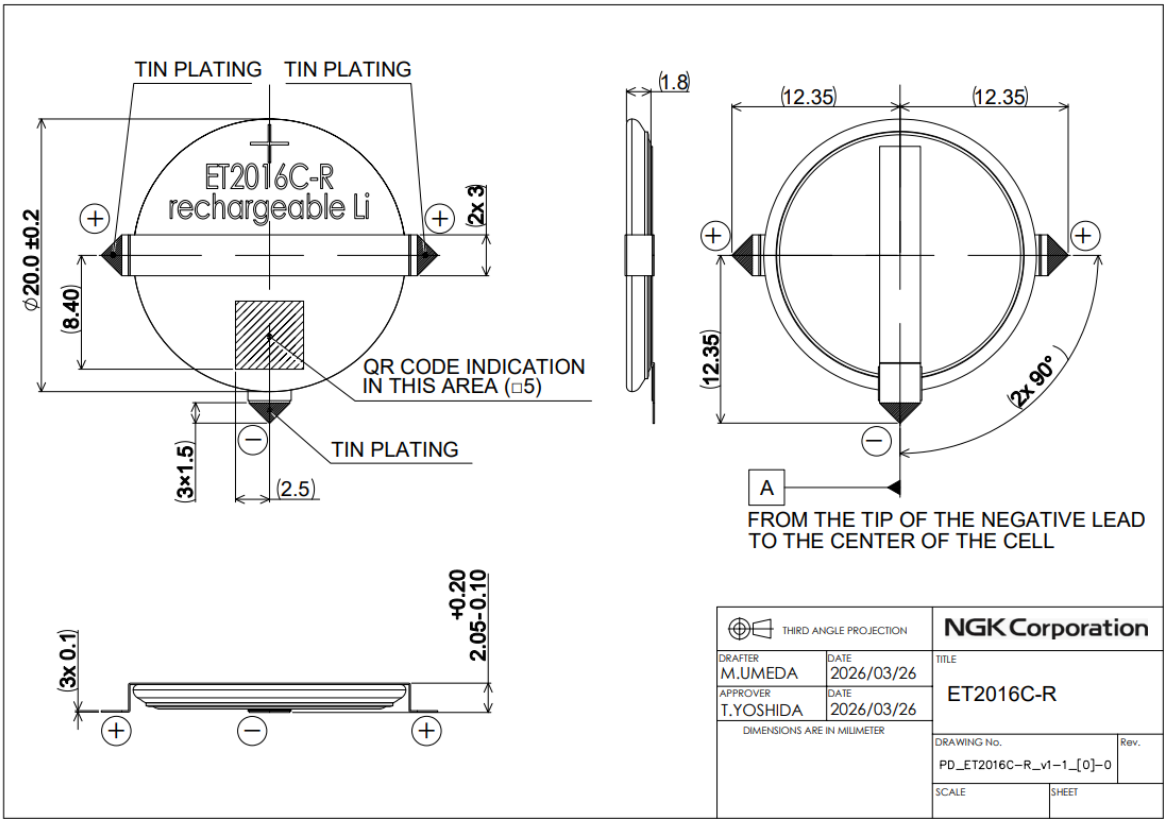

Lists of harmonized standards

EnerCera coin is classified as portable battery of general use (button cell) and meets the following requirements.

Article 6: Restriction on substances

Article 13: Labelling and marking of batteries
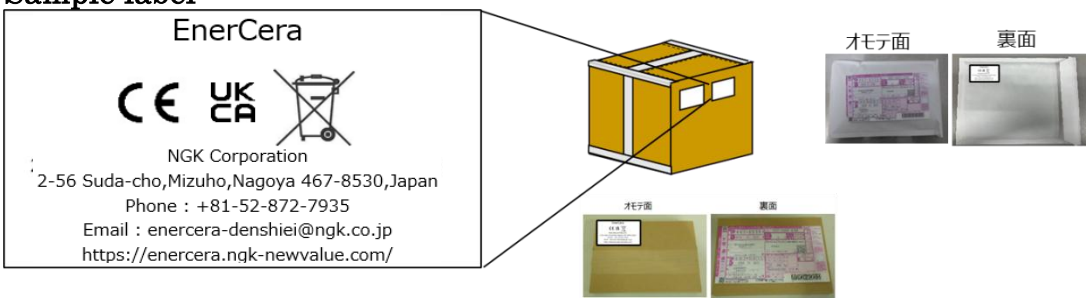
Sample label